YAMAZAKI MAZAK Corporation has the property of this drawing and the design shown in it, any part of this drawing and design shall not be disclosed to any third party without prior permission of YAMAZAKI MAZAK Corporation.

This product is subject to all the applicable Japanese Foreign Exchange and Foreign Trade Law.

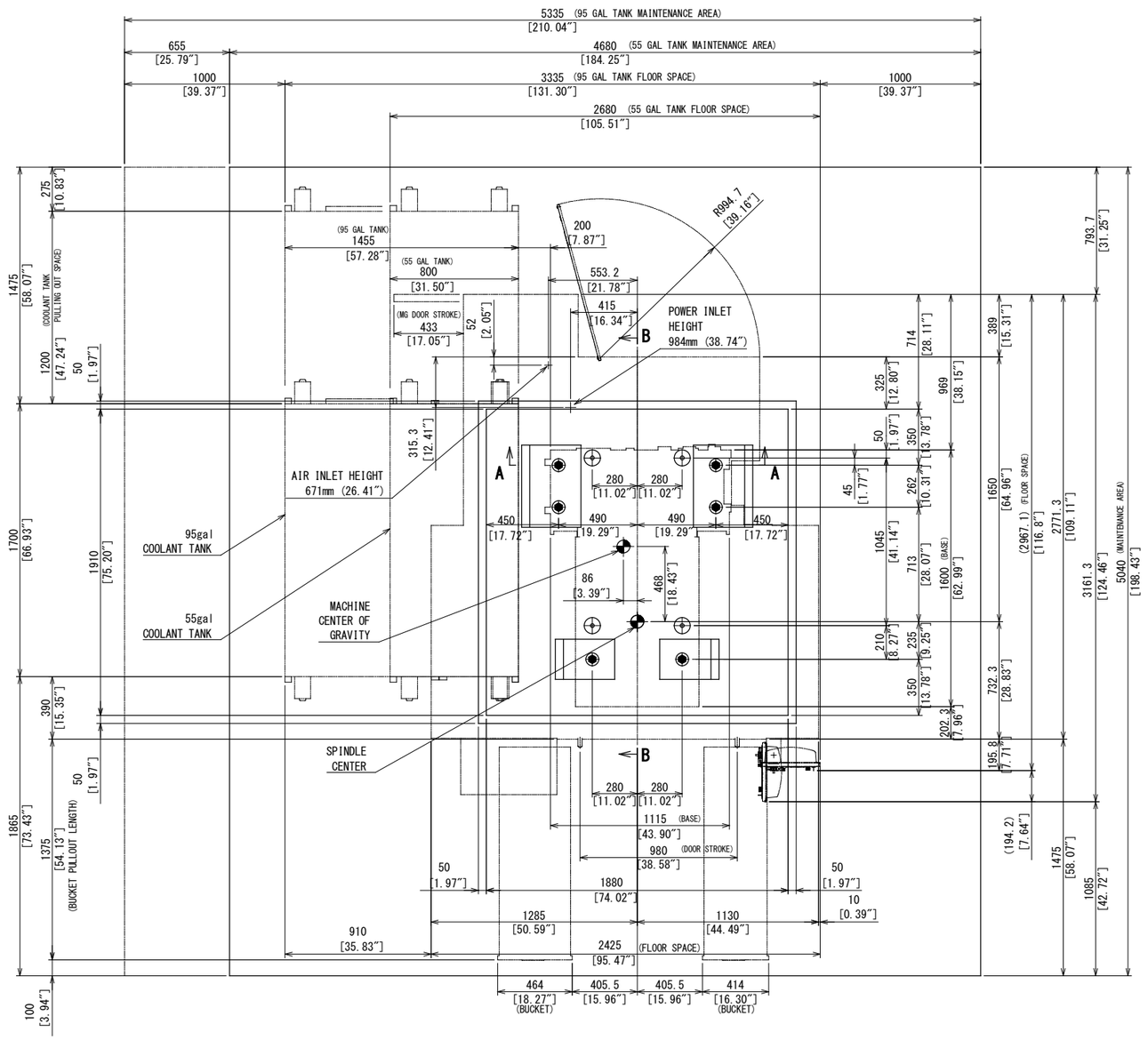

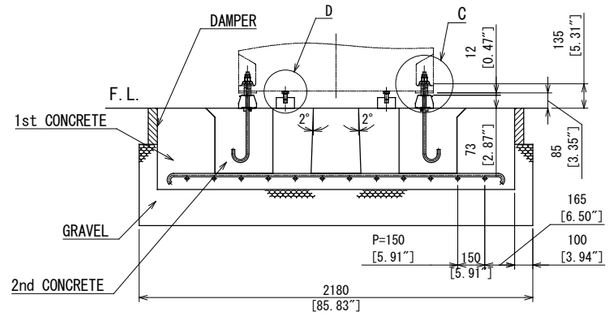

A-A SECTION

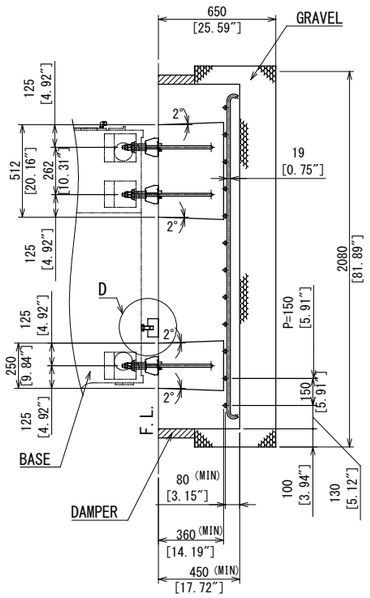

B-B SECTION

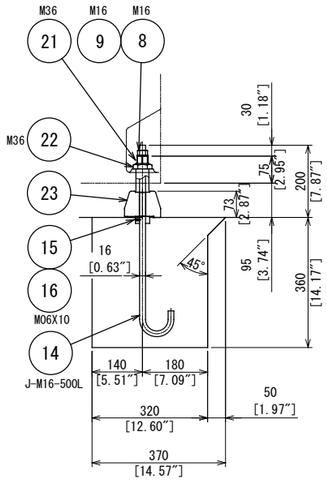

C DETAIL (S=1:6)

(6 PLACES)

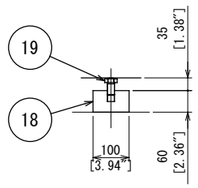

D DETAIL (S=1:6)

(4 PLACES)

Suggestions for Floor Foundation Preparation

1. Use gravel stones, to obtain a minimum soil bearing pressure of 49kPa(1024lbs/ft²)
2. Use concrete with a minimum compressive strength of 17.7MPa (2560PSI) and tensile strength of 1.8MPa (256PSI)
3. Take precautions so that there are no cracks in the concrete.
4. Use a vibration isolator (such as asphalt) around the foundation base.
5. To reinforce the concrete, lay steel bars (19mm dia.3/4in.dia.) in the form of grid at a pitch of 150mm(5.91in.)
6. Confirm that the inner walls of the foundation bolt pits are jagged,rough and uneven so as so facilitate the secondary poured concrete to adhere fast the initially poured concrete.
7. For the first step, pour the concrete with holes prepared for foundation bolts. After the concrete has been sufficiently cured, install the foundation bolts, leveling blocks and other fittings and establish the rough level of the machine. For the second step, pour the concrete into the foundation bolt holes to secure the foundation bolts to the floor.
8. When pouring the secondary concrete into the foundation bolt pits, fix the leveling blocks and the steel plates to the foundation bolts by tightening the set screw provided in the collar. After the concrete has been cured, level the machine and secure the leveling blocks to the machine by tightening the nuts (M16). At this time the collar is forced down onto the concrete along the foundation bolt and the tensile load is applied to bolt.
9. Total volume of concrete 1.6m³ (57.1ft³)
10. It is advisable to mix a proper inflating agent (such as Denka CSA) in the concrete used to fill the anchor bolts pits so as to prevent the concrete from contracting after it has cured..
11. Use a proprietary finish to the concrete surface to prevent water penetration and provide a smooth finish.
12. This drawing to be read in conjunction with the general arrangement drawing to ensure there is sufficient space around the machine for maintenance.

mm
[Inch]

<ANCHOR BOLT>

SPECIFICATION OF UNIT									THIRD ANGLE PROJECTION			
UNIT No.	5D6661004C0	8	—	. .	—				APP'D	CHK'D	DSGN	DRAWING
SPEC.	VC-Ez 16	7	—	. .	—				031722	031722	031722	031722
	BUCKET/50T-MG/ANCHOR BOLT	6	—	. .	—				K.N	JVM	K.N	T-Y.Y
		5	—	. .	—				SCALE	NAME		
		4	—	. .	—				1:12	VC-Ez 16		
		3	—	. .	—				(1:6)	FOUNDATION DRAWING		
		2	—	. .	—				DRAWING NO.	0	D66	61	AC20	0
		1	—	. .	—									
			QTY	DATE	DC NO.	SIGN						

Mazak METRIC/INCH