YAMAZAKI MAZAK Corporation has the property of this drawing and the design shown in it, any part of this drawing and design shall not be disclosed to any third party without prior permission of YAMAZAKI MAZAK Corporation.

This product is subject to all the applicable Japanese Foreign Exchange and Foreign Trade Law.

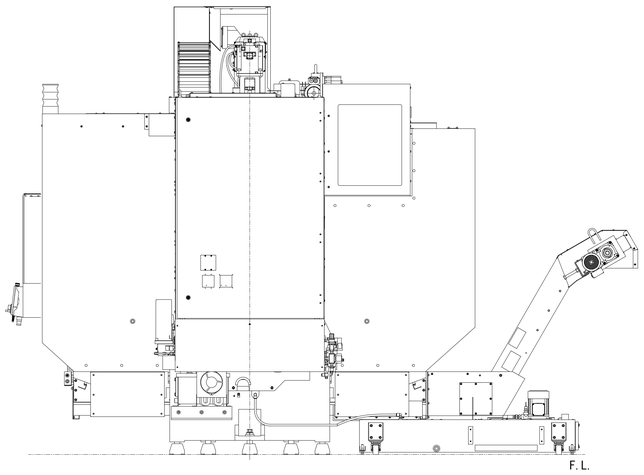

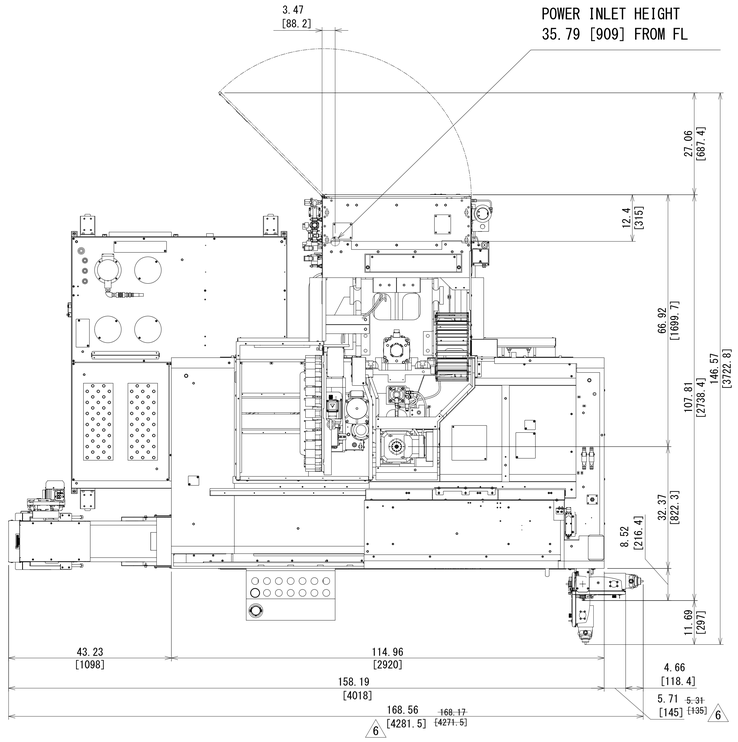

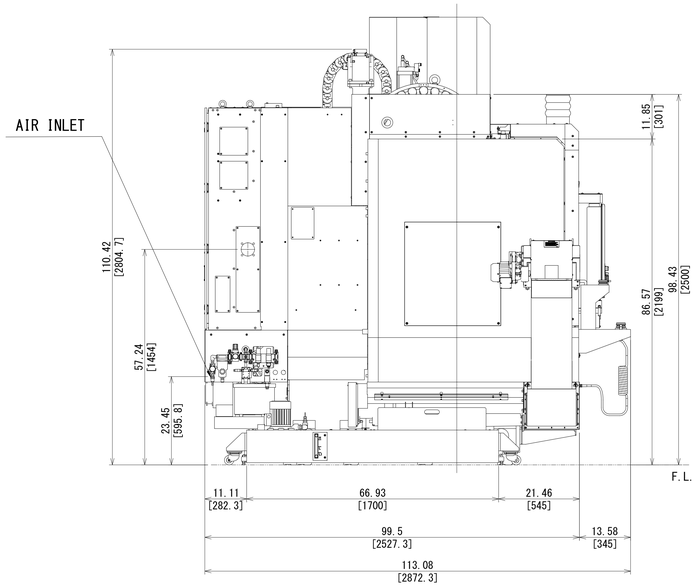

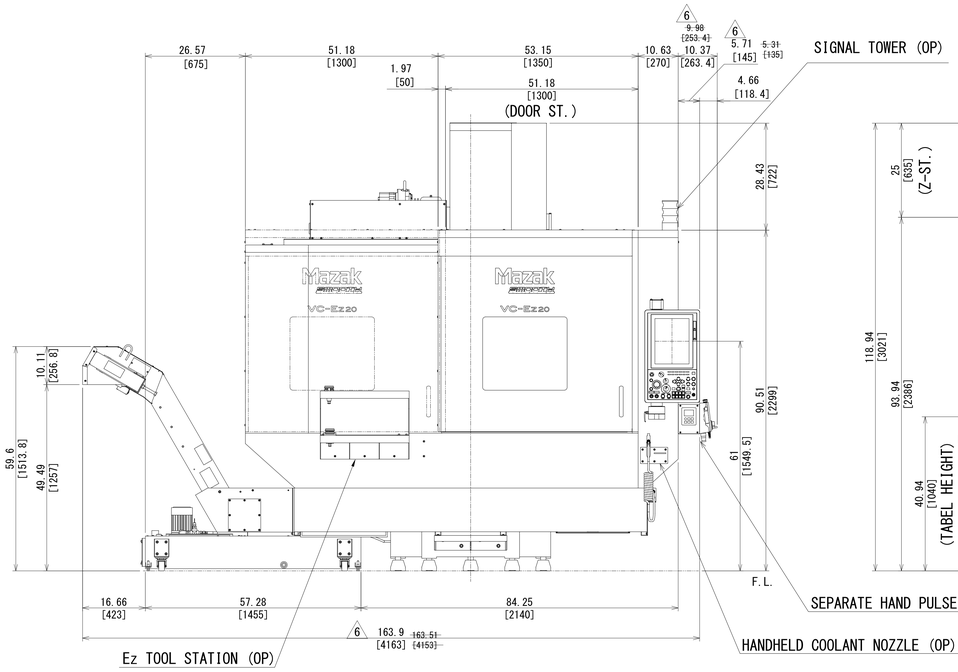

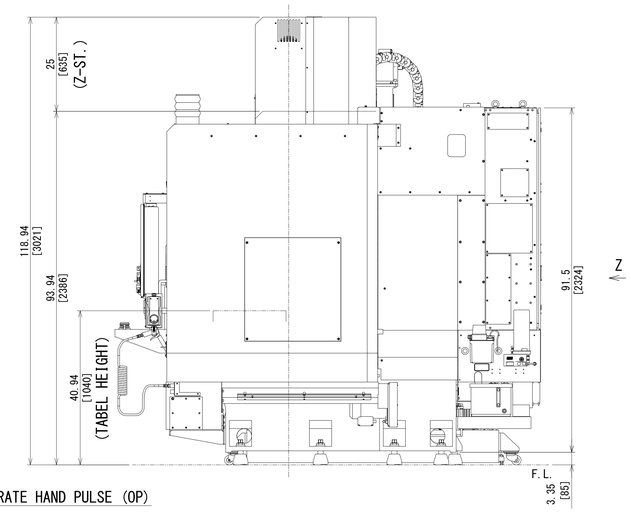

Inch
[mm]

9	—		—		THIRD ANGLE PROJECTION			
8	—		—		APP'D	CHK'D	DSGN	DRAWING
7	—		—		111720	111720	111720	111720
6	— 5	05/24/2023	D65049M00	M-K.S	K.N	JVM	K.N	M-K.S
5	— 1	09/22/2022	D65042M00	T-S.M				
4	— 1	12/17/2021	D65030M00	T-K.S	SCALE	NAME		
3	— 1	05/28/2021	D65022M00	T-K.S	1:14	VC-Ez 20 30T 95galタンク ヒンジコンベア仕様全体図		
2	— 1	04/05/2021	D65020M00	T-Y.Y		VC-Ez 20 30T 95gal TANK HINGE CONVEYOR TOTAL VIEW DRAWING		
1	— 1	02/26/2021	D65011M00	T-T.Y	DRAWING NO.	0 D65 TV C008 6		
	QTY	DATE	DC NO.	SIGN				

5
4
3
2
1 THIS IS REDRAWN

Mazak INCH/METRIC