YAMAZAKI MAZAK Corporation has the property of this drawing and the design shown in it, any part of this drawing and design shall not be disclosed to any third party without prior permission of YAMAZAKI MAZAK Corporation.

This product is subject to all the applicable Japanese Foreign Exchange and Foreign Trade Law.

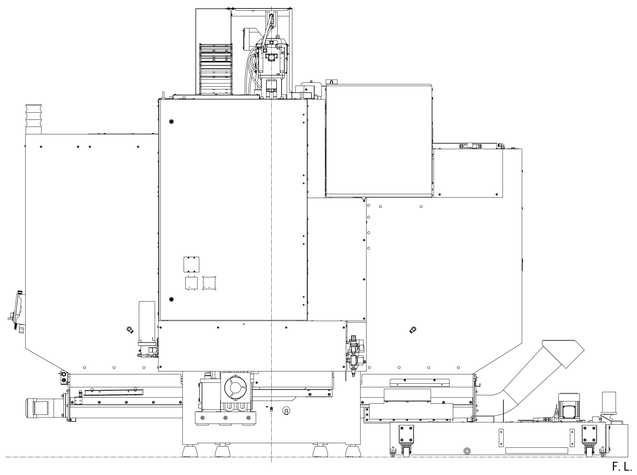


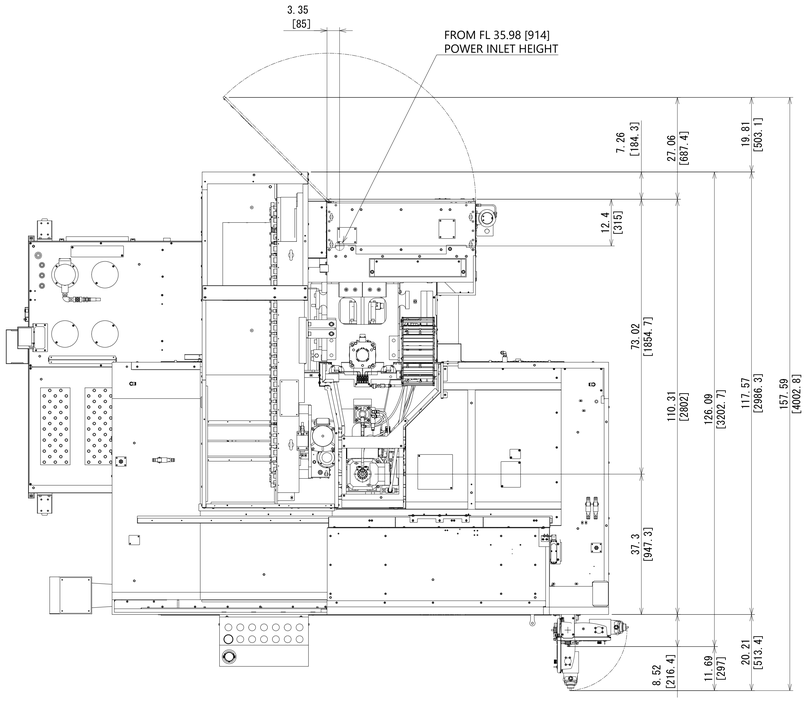


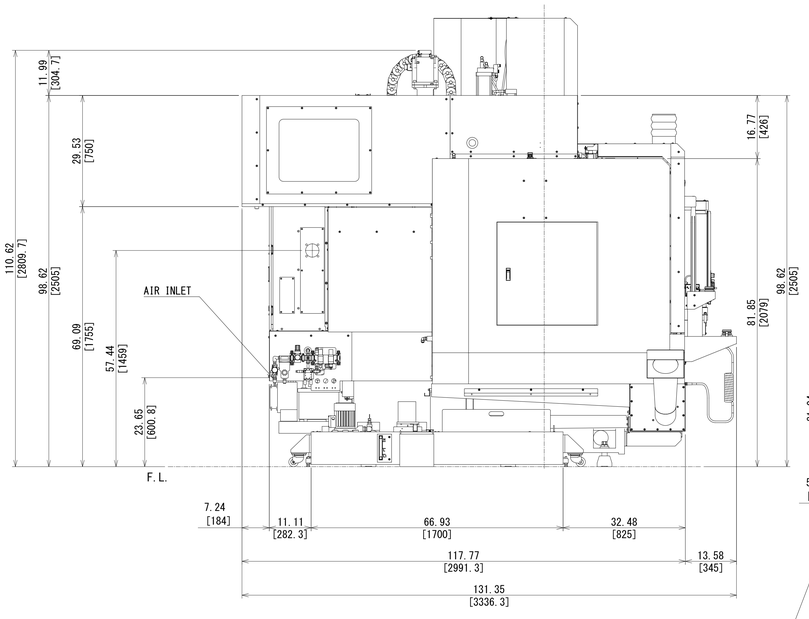


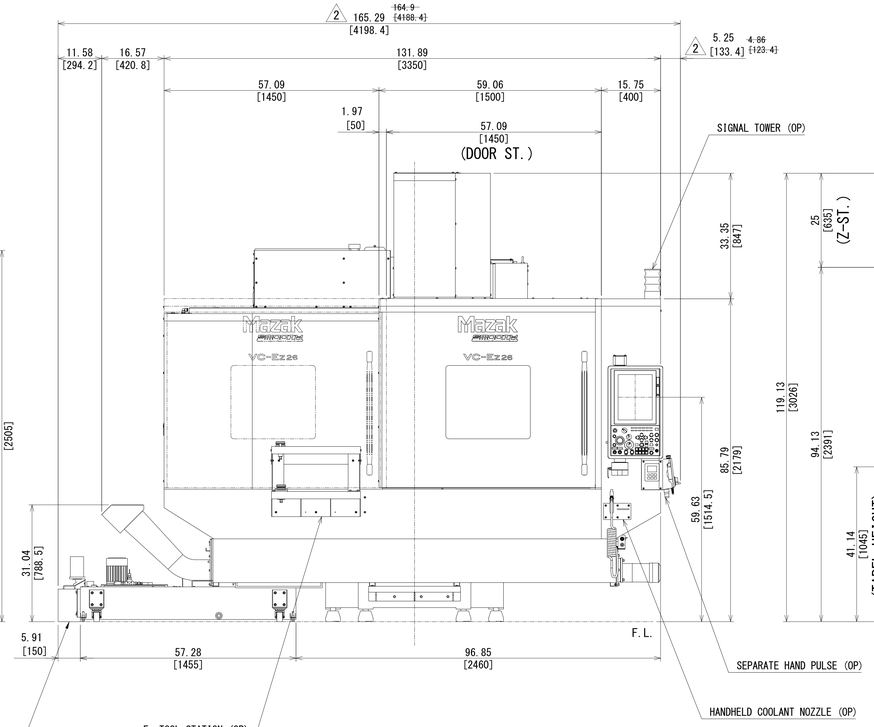


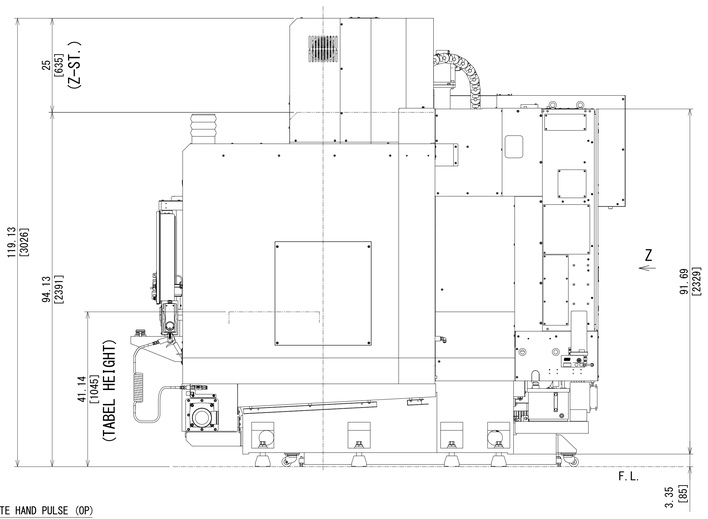


Inch
[mm]

1 THIS IS REDRAWN

| | | | | | | | | |
|---|---|---|---|---|---|---|---|---|
| 9 | — | . . | — | | THIRD ANGLE PROJECTION | | | |
| 8 | — | . . | — | | APP'D | CHK'D | DSGN | DRAWING |
| 7 | — | . . | — | | 012022 | 012022 | 012022 | 012022 |
| 6 | — | . . | — | | K.N | JVM | K.N | T-K.S |
| 5 | — | . . | — | | SCALE | NAME | | |
| 4 | — | . . | — | | 1:14 | VC-Ez 26 50T 95galタンク オーガコンベア仕様全体図 | | |
| 3 | — | . . | — | | | VC-Ez 26 50T 95gal TANK AUGER CONVEYOR TOTAL VIEW DRAWING | | |
| 2 | 2 | 06/06/2023 | D65049M00 | M-R.T | DRAWING NO. | 0 D67 TV C044 2 | | |
| 1 | 1 | 09/22/2022 | D67002M00 | T-T.Y | | | | |
| | QTY | DATE | DC NO. | SIGN | | | | |

Mazak INCH/METRIC