YAMAZAKI MAZAK Corporation has the property of this drawing and the design shown in it, any part of this drawing and design shall not be disclosed to any third party without prior permission of YAMAZAKI MAZAK Corporation.

This product is subject to all the applicable Japanese Foreign Exchange and Foreign Trade Law.

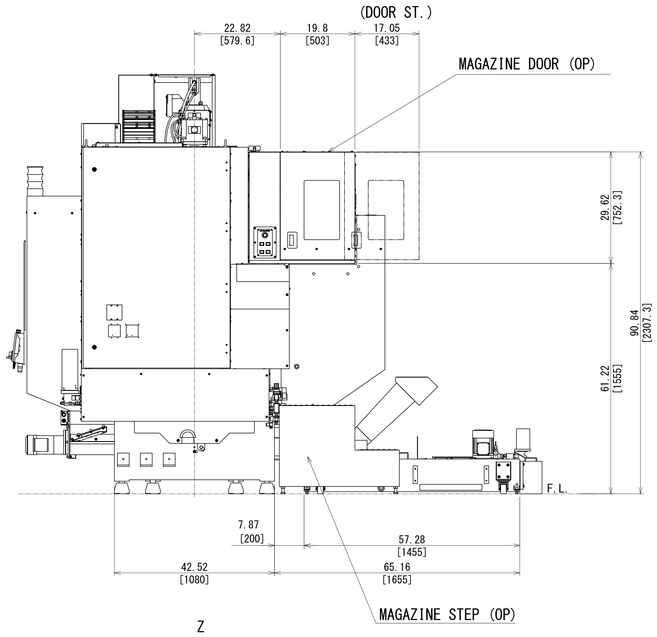

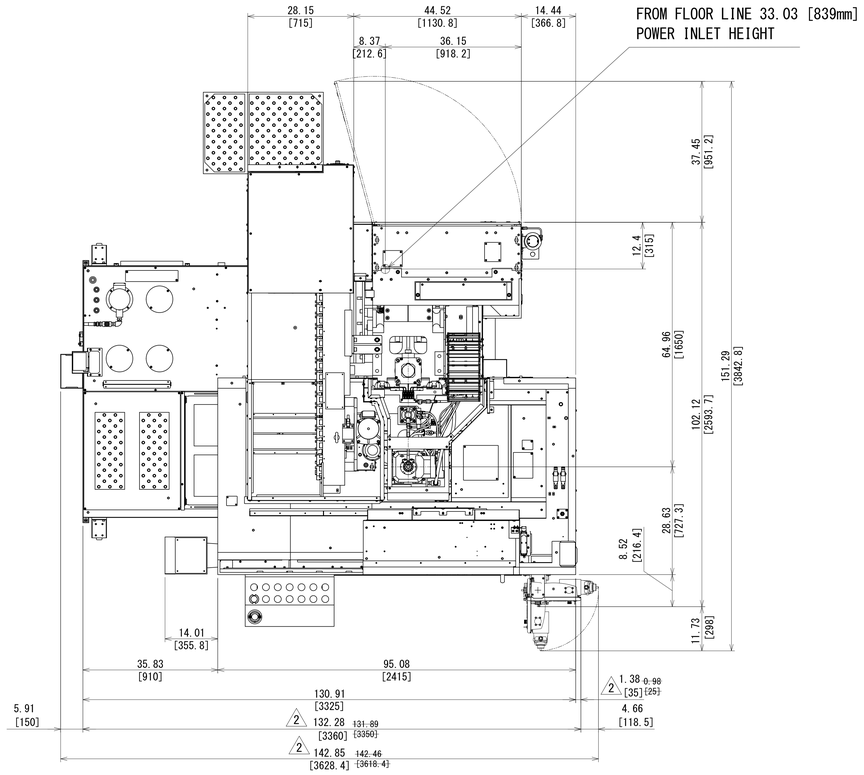

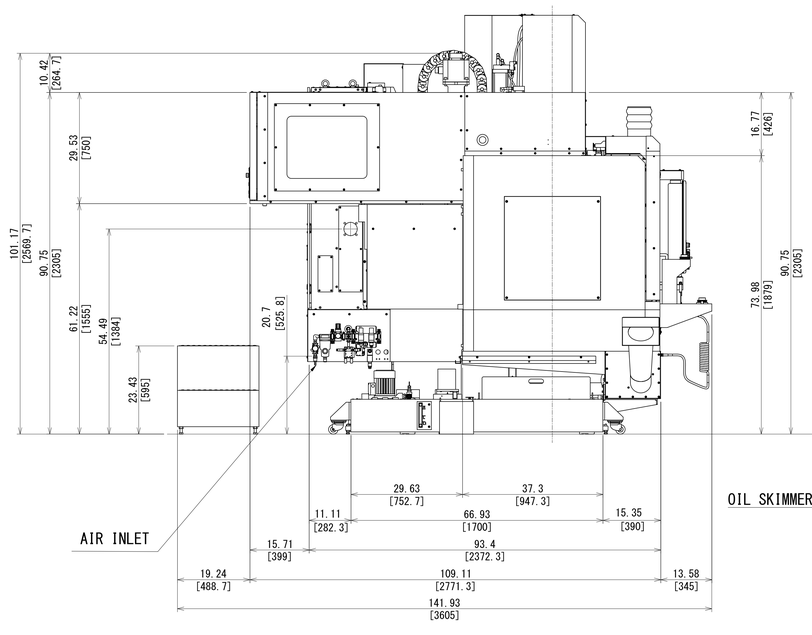

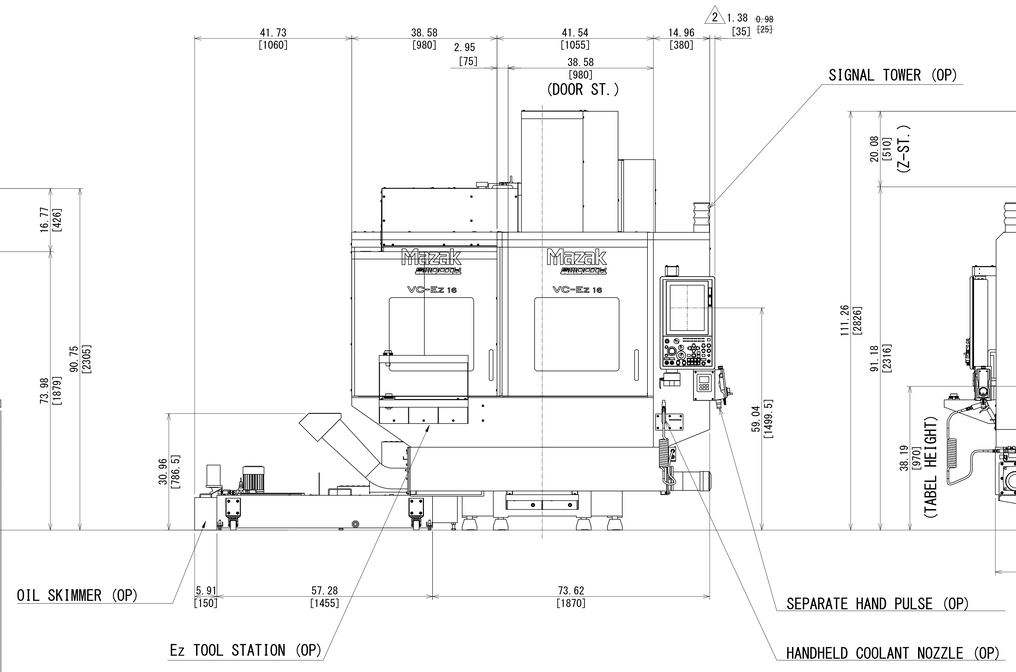

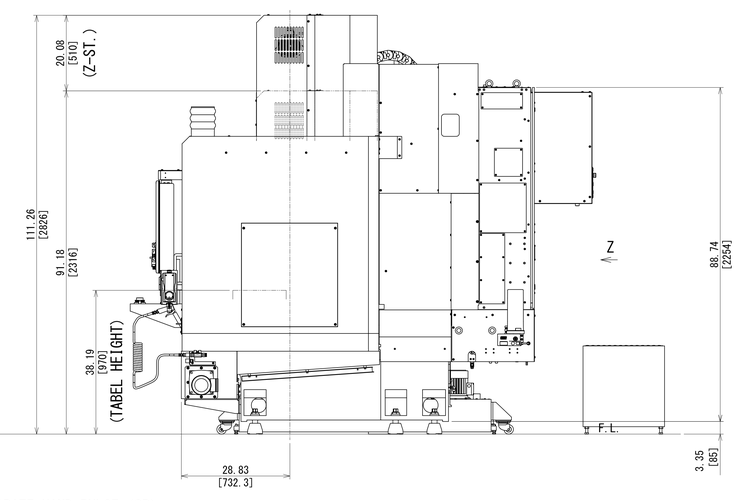

1 THIS IS REDRAWN

Inch
[mm]

9				THIRD ANGLE PROJECTION			
8				APP'D	CHK'D	DSGN	DRAWING
7				022422	022422	022422	022422
6				K.N	JVM	K.N	M-R.T
5							
4				SCALE	NAME		
3				1:14	量産 VC-Ez 16 50T 95gal MG ドア オーガコンベア仕様全体図		
2	4	05/11/2023	D65049M00	M-K.S	MASS VC-Ez 16 50T 95gal MG DOOR AUGER CONVEYOR TOTAL VIEW DRAWING		
1	1	09/22/2022	D66003M00	T-K.S	DRAWING NO.	0 D66 TV C059 2	
	QTY	DATE	DC NO.	SIGN			

Mazak INCH/METRIC