YAMAZAKI MAZAK Corporation has the property of this drawing and the design shown in it, any part of this drawing and design shall not be disclosed to any third party without prior permission of YAMAZAKI MAZAK Corporation.

This product is subject to all the applicable Japanese Foreign Exchange and Foreign Trade Law.

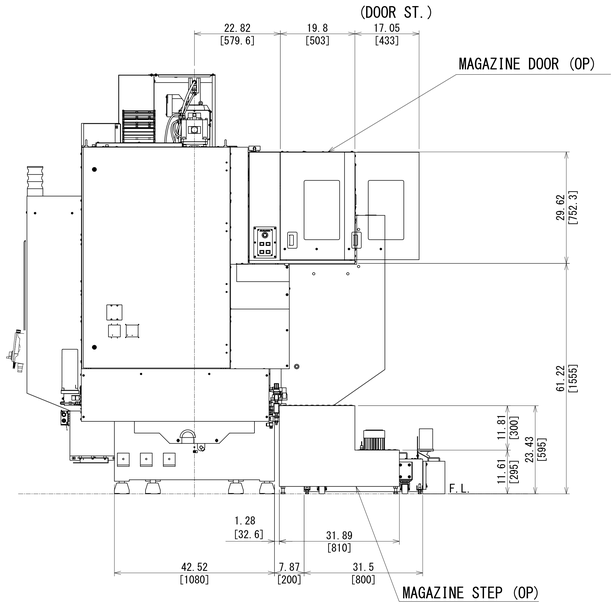

Z

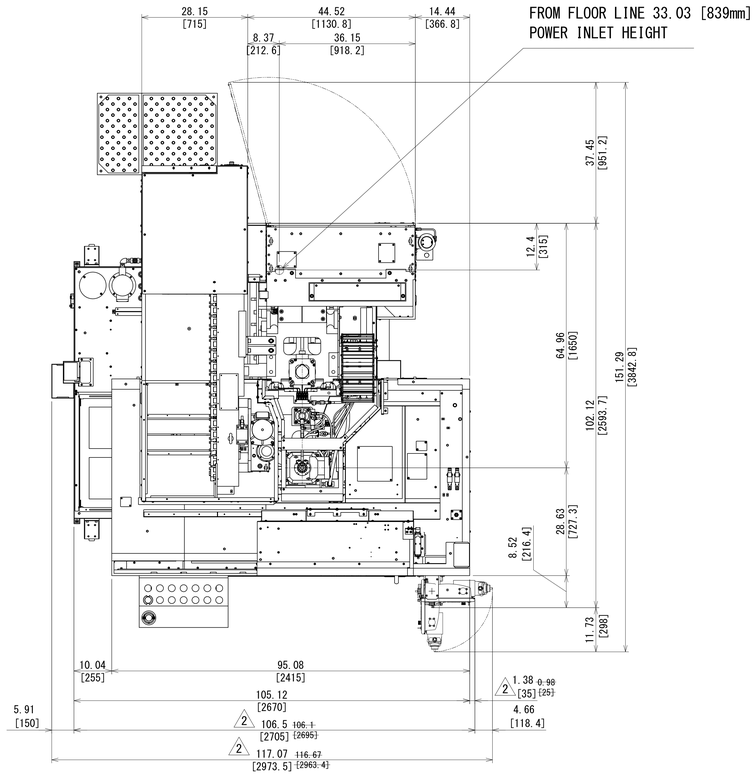

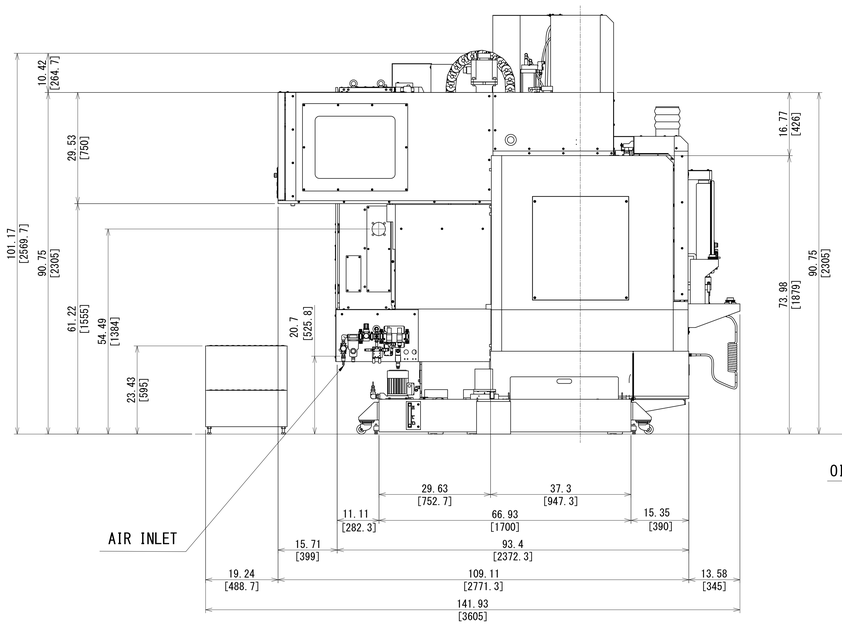

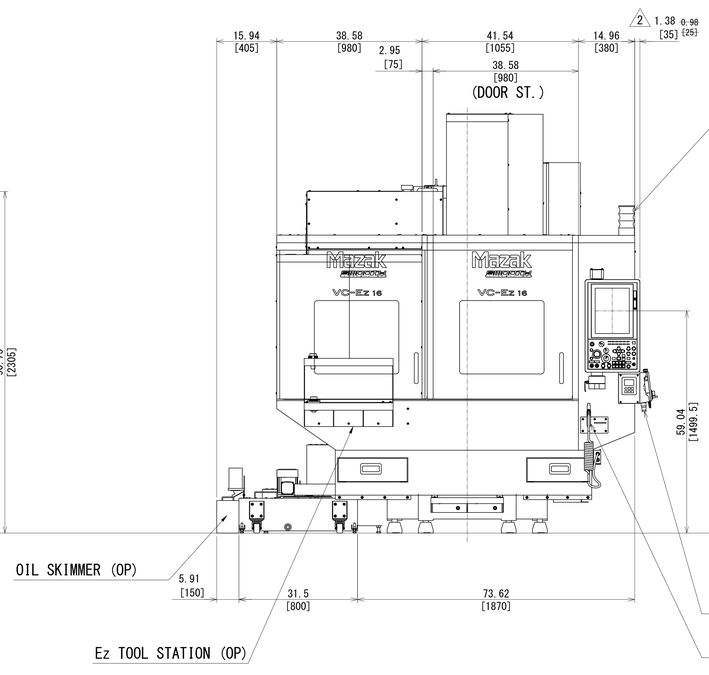

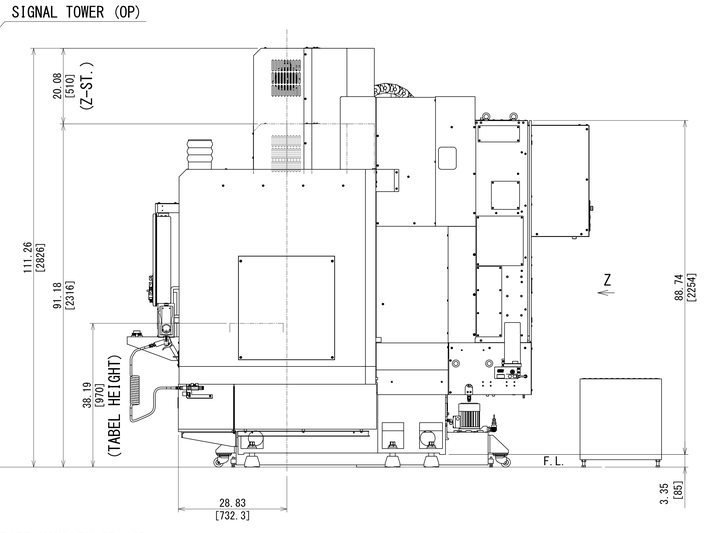

1 THIS IS REDRAWN

Inch
[mm]

QTY	DATE	DC NO.	SIGN
9	. .	—	
8	. .	—	
7	. .	—	
6	. .	—	
5	. .	—	
4	. .	—	
3	. .	—	
2	4 05/10/2023	D65049M00	M-K.S
1	1 09/22/2022	D66003M00	T-K.S

THIRD ANGLE PROJECTION

APP'D	CHK'D	DSGN	DRAWING
022122	022122	022122	022122
K.N	JVM	K.N	M-K.S

SCALE 1:14

NAME: 量産 VC-Ez 16 50T MGドア バケット仕様全体図
MASS VC-Ez 16 50T MG DOOR BUCKET TOTAL VIEW DRAWING

DRAWING NO. 0 D66 TV C052 2

Mazak INCH/METRIC