YAMAZAKI MAZAK Corporation has the property of this drawing and the design shown in it, any part of this drawing and design shall not be disclosed to any third party without prior permission of YAMAZAKI MAZAK Corporation.

This product is subject to all the applicable Japanese Foreign Exchange and Foreign Trade Law.

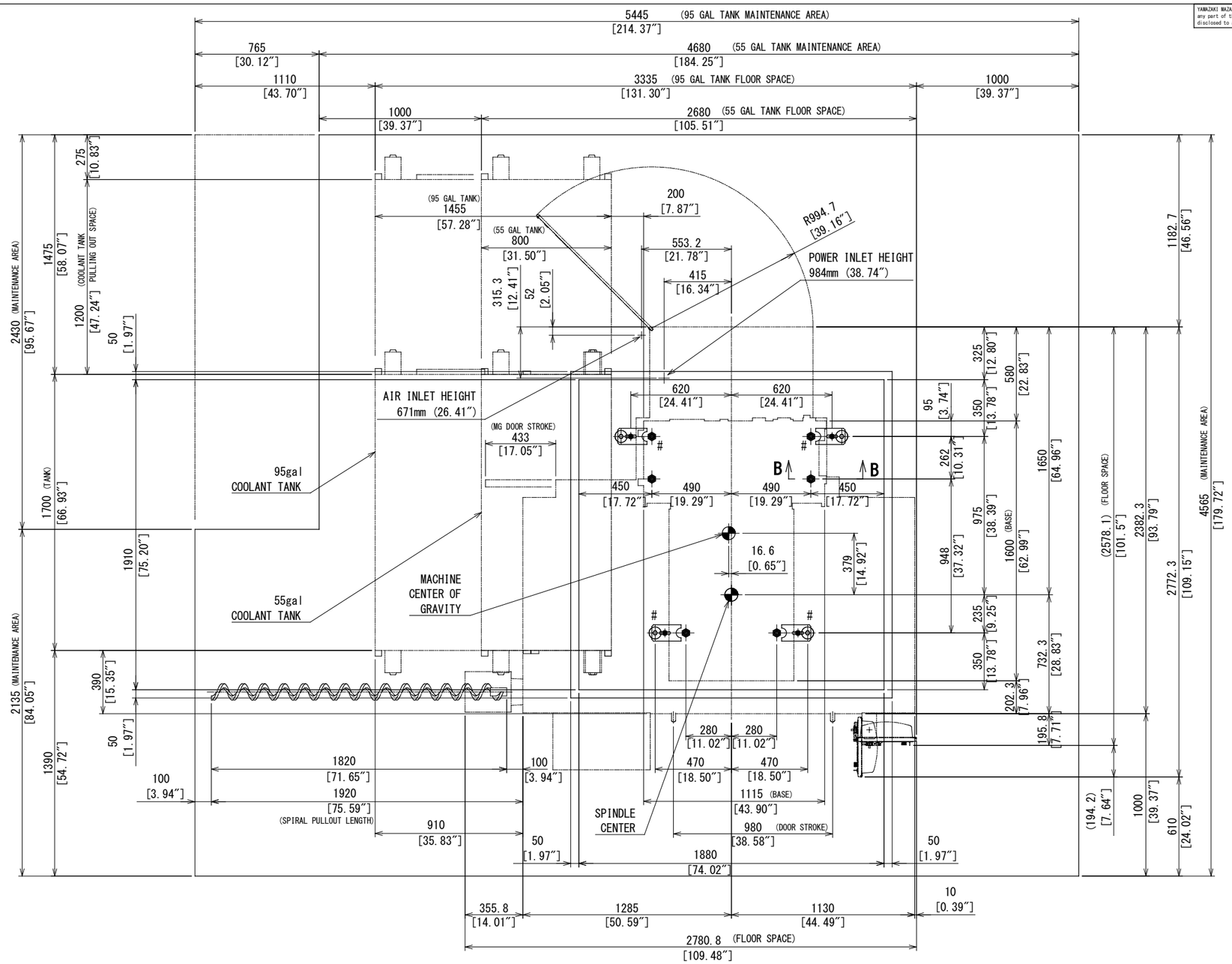

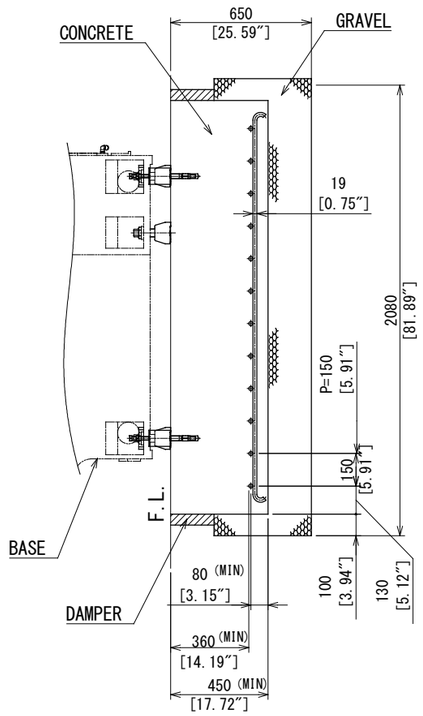

B-B SECTION

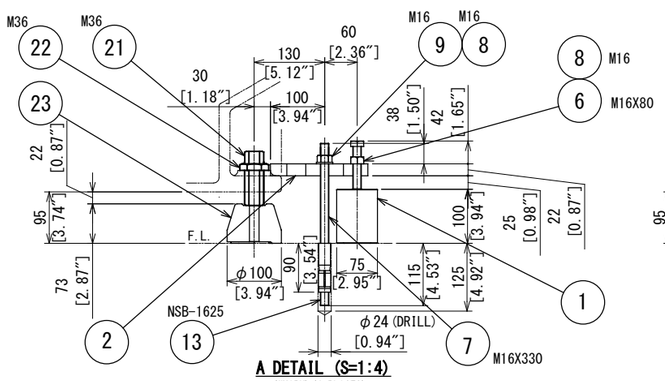

A DETAIL (S=1:4)
(#MARK) (4 PLACES)

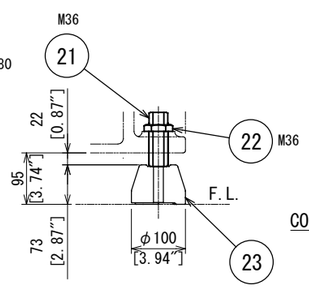

B-B SECTION (S=1:4)
(2 PLACES)

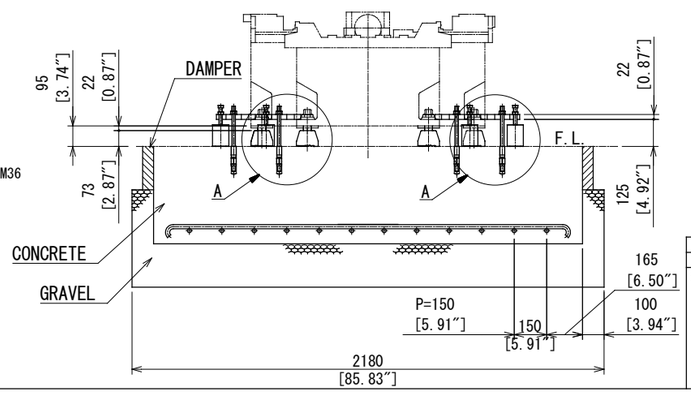

mm
[Inch]

Suggestions for Floor Foundation Preparation
1) Use gravel stones to obtain a minimum soil bearing pressure of 49kPa (1024lbs/ft²).
2) Use concrete with a minimum compressive strength of 17.7MPa (2560 PSI) and tensile strength of 1.8MPa (256 PSI).
3) Take precautions so that there are no cracks in the concrete.
4) 4 nos. whole anchors (marked #) should be positioned , drilled and set prior to set-up the machine.
5) Use a vibration isolator (such as asphalt) around the foundation base.
6) To reinforce the concrete, lay steel bars (19mm dia,3/4in.dia.) in the form of grid at a pitch of 150mm(5.91in.)
7) Total volume of concrete 1.6m³ (57.1ft³)
8) Use a proprietary finish to the concrete surface to prevent water penetration and provide a smooth finish.
9) This drawing to be read in conjunction with the general arrangement drawing to ensure there is sufficient space around the machine for maintenance.

<DRY PIT>

SPECIFICATION OF UNIT		QTY	DATE	DC NO.	SIGN
UNIT No.	5D6661003C0	8	—	—	
SPEC.	VC-Ez 16	7	—	—	
	AUGER/30T-MG/DRY PIT	6	—	—	
		5	—	—	
		4	—	—	
		3	—	—	
		2	—	—	
		1	—	—	

THIRD ANGLE PROJECTION

APP'D	CHK'D	DSGN	DRAWING
031722	031722	031722	031722
K.N	JVM	K.N	T-Y.Y

SCALE	NAME
1:10	VC-Ez 16
(1:4)	FOUNDATION DRAWING

DRAWING NO. 0 D66 61 AC15 0

Mazak METRIC/INCH