YAMAZAKI MAZAK Corporation has the property of this drawing and the design shown in it, any part of this drawing and design shall not be disclosed to any third party without prior permission of YAMAZAKI MAZAK Corporation.
ヤマザキマザック株式会社はこの図面および図面に開示された技術情報に関する権利を所有し、当社の事前の許可なく、その全部又は一部を問わず第三者に開示してはならない。

This product is subject to all the applicable Japanese Foreign Exchange and Foreign Trade Law.
本品は「外国為替及び外国貿易法」に該当しますので外国に輸出する場合には同法に基づく許可を必要とします。

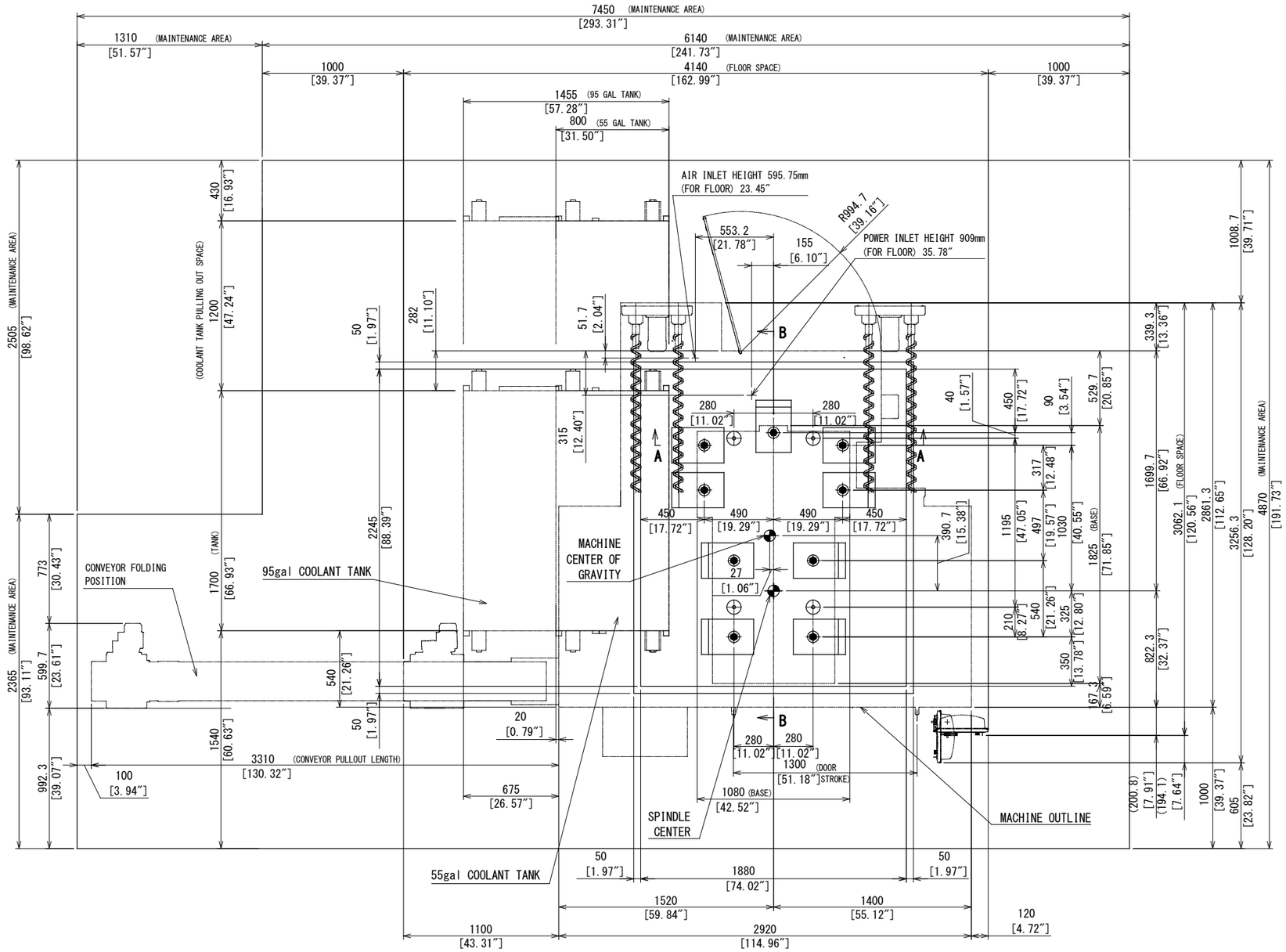

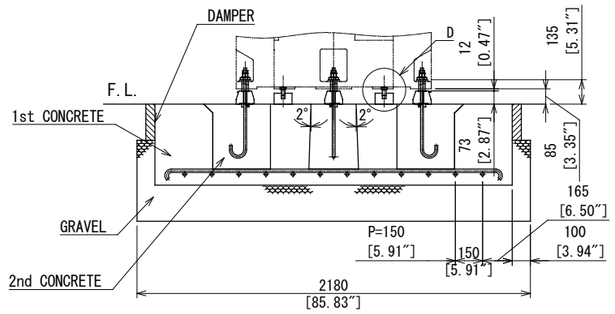

A-A SECTION

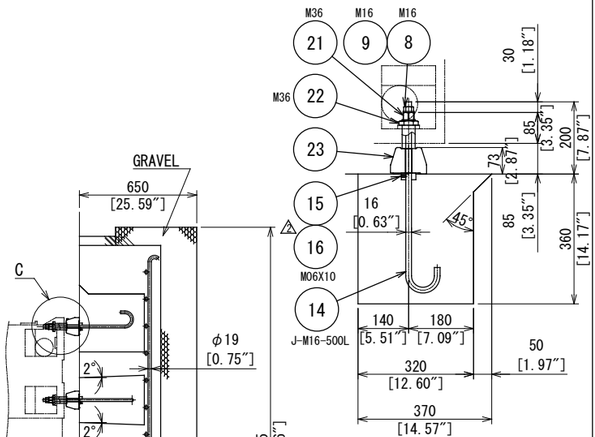

C DETAIL (S=1:6)

(9 PLACES)

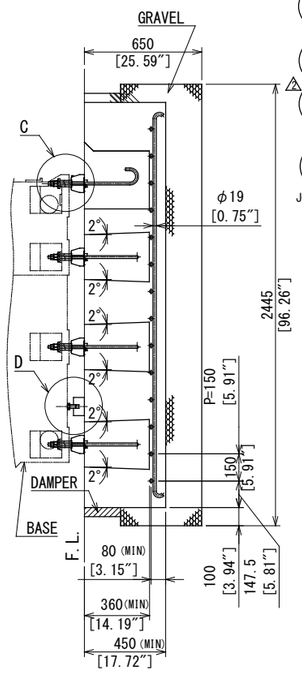

B-B SECTION

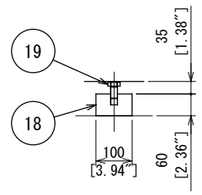

D DETAIL (S=1:6)

(4 PLACES)

Suggestions for Floor Foundation Preparation

1. Use gravel stones, to obtain a minimum soil bearing pressure of 49kPa(1024lbs/ft²)
2. Use concrete with a minimum compressive strength of 17.7MPa (2560PSI) and tensile strength of 1.8MPa (256PSI)
3. Take precautions so that there are no cracks in the concrete.
4. Use a vibration isolator (such as asphalt) around the foundation base.
5. To reinforce the concrete, lay steel bars (19mm dia.3/4in.dia.) in the form of grid at a pitch of 150mm(5.91in.)
6. Confirm that the inner walls of the foundation bolt pits are jagged,rough and uneven so as so facilitate the secondary poured concrete to adhere fast the initially poured concrete.
7. For the first step, pour the concrete with holes prepared for foundation bolts. After the concrete has been sufficiently cured, install the foundation bolts, leveling blocks and other fittings and establish the rough level of the machine. For the second step, pour the concrete into the foundation bolt holes to secure the foundation bolts to the floor.
8. When pouring the secondary concrete into the foundation bolt pits, fix the leveling blocks and the steel plates to the foundation bolts by tightening the set screw provided in the collar. After the concrete has been cured, level the machine and secure the leveling blocks to the machine by tightening the nuts (M16). At this time the collar is forced down onto the concrete along the foundation bolt and the tensile load is applied to bolt.
9. Total volume of concrete 1.9m³ (67.1ft³)
10. It is advisable to mix a proper inflating agent (such as Denka CSA) in the concrete used to fill the anchor bolts pits so as to prevent the concrete from contracting after it has cured..
11. Use a proprietary finish to the concrete surface to prevent water penetration and provide a smooth finish.
12. This drawing to be read in conjunction with the general arrangement drawing to ensure there is sufficient space around the machine for maintenance.

△2 △1 THIS IS REDRAWN

<ANCHOR BOLT>

SPECIFICATION OF UNIT		△3 —	. .	—		THIRD ANGLE PROJECTION				
UNIT No.	5D6561004C2 △2	△2 —	. .	—		APP'D	CHK'D	DSGN	DRAWING	
SPEC.	MASS PRODUCTION	△1 —	. .	—		121120	121120	121120	121120	
	HINGE/50T-MG/ANCHOR BOLT	△0 —	. .	—		K.N	JVM	K.N	M-K.S	
		△0 —	. .	—						
		△0 —	. .	—		SCALE	NAME			
		△0 —	. .	—		1:12	VC-Ez 20			
		△2 — 3	11/18/2021	D65030M00	T-K.S	(1:6)	FOUNDATION DRAWING			
		△1 — 1	02/26/2021	D65012M00	T-Y.Y	DRAWING NO.	0	D65	61	AC05	2
		QTY	DATE	DC NO.	SIGN					

Mazak METRIC/INCH